RAMM-B1056

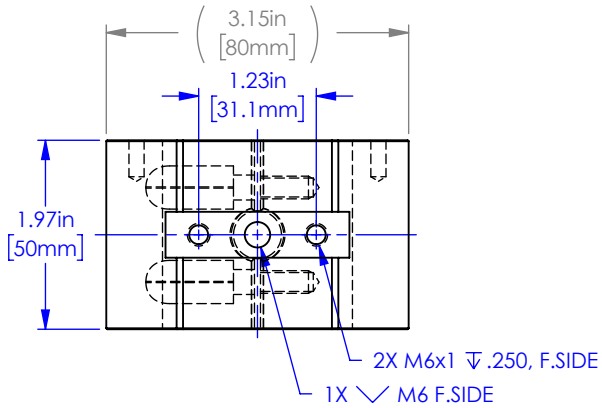

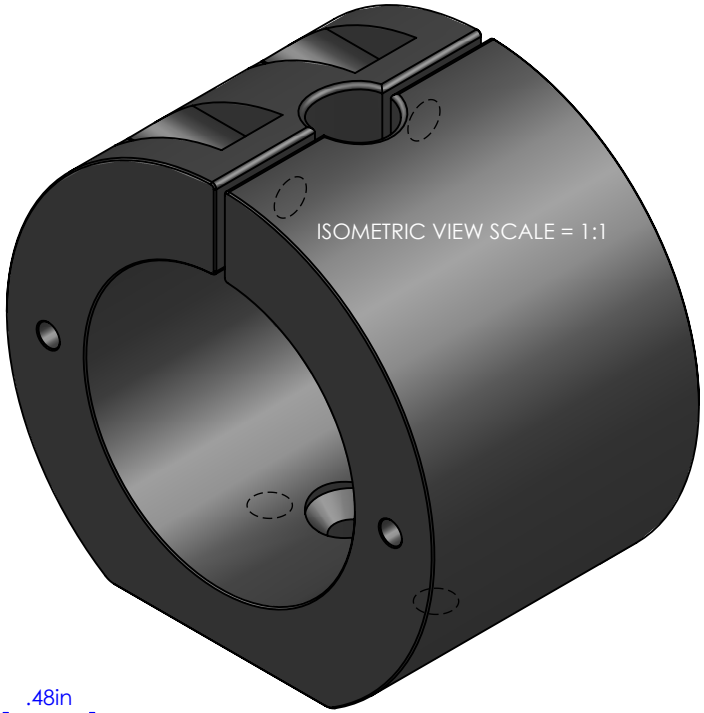

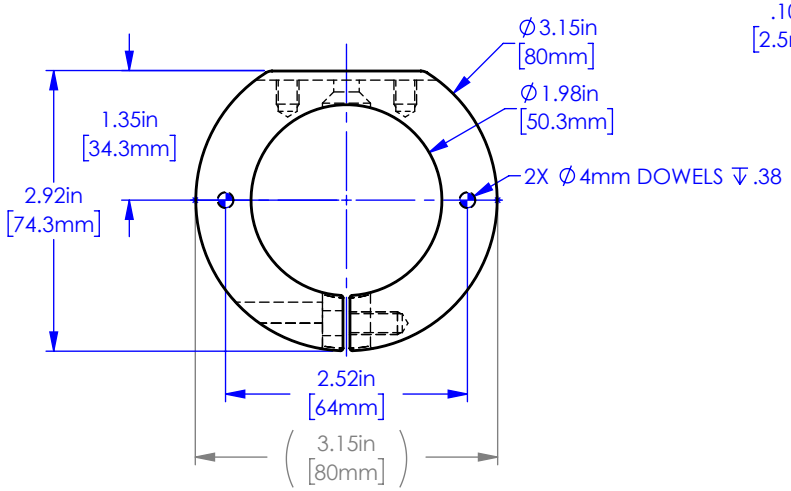

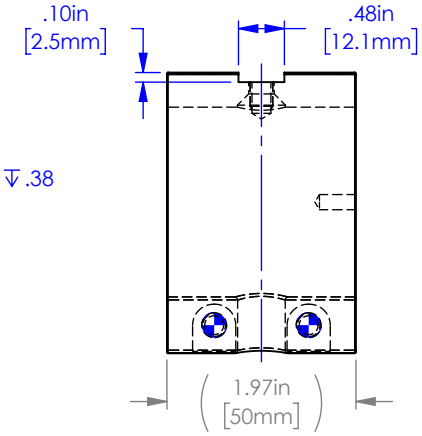

PROPRIETARY AND CONFIDENTIAL

THE INFORMATION CONTAINED IN THIS DRAWING IS THE SOLE PROPERTY OF APPLIED SCIENTIFIC INSTRUMENTATION. ANY REPRODUCTION IN PART OR AS A WHOLE WITHOUT THE WRITTEN PERMISSION OF APPLIED SCIENTIFIC INSTRUMENTATION IS PROHIBITED.

APPLIED SCIENTIFIC INSTRUMENTATION
29391 W ENID RD
EUGENE, OR 97402-9533
PHONE: (541)461-8181
FAX: (541)461-4018

UNLESS OTHERWISE SPECIFIED
DIMENSIONS ARE IN INCHES
.xx ± .01
.xxx ± .005
.xxxx ± .0002
FRACTIONS ± 1/32
ANGLES ± 1°

DESCRIPTION: diSPIM CAMERA TUBE MOUNT

DRAWN BY/DATE	CHECKED BY/DATE	SCALE	REV	MATERIAL	DRAWING #
M.ANTHONY 11-24-2020	V.MARSO J. DANIELS 11-24-2020	1:2	-	6061, ANODIZED BLK	RAMM-B1056

5 4 3 2 1