IPZ-3001

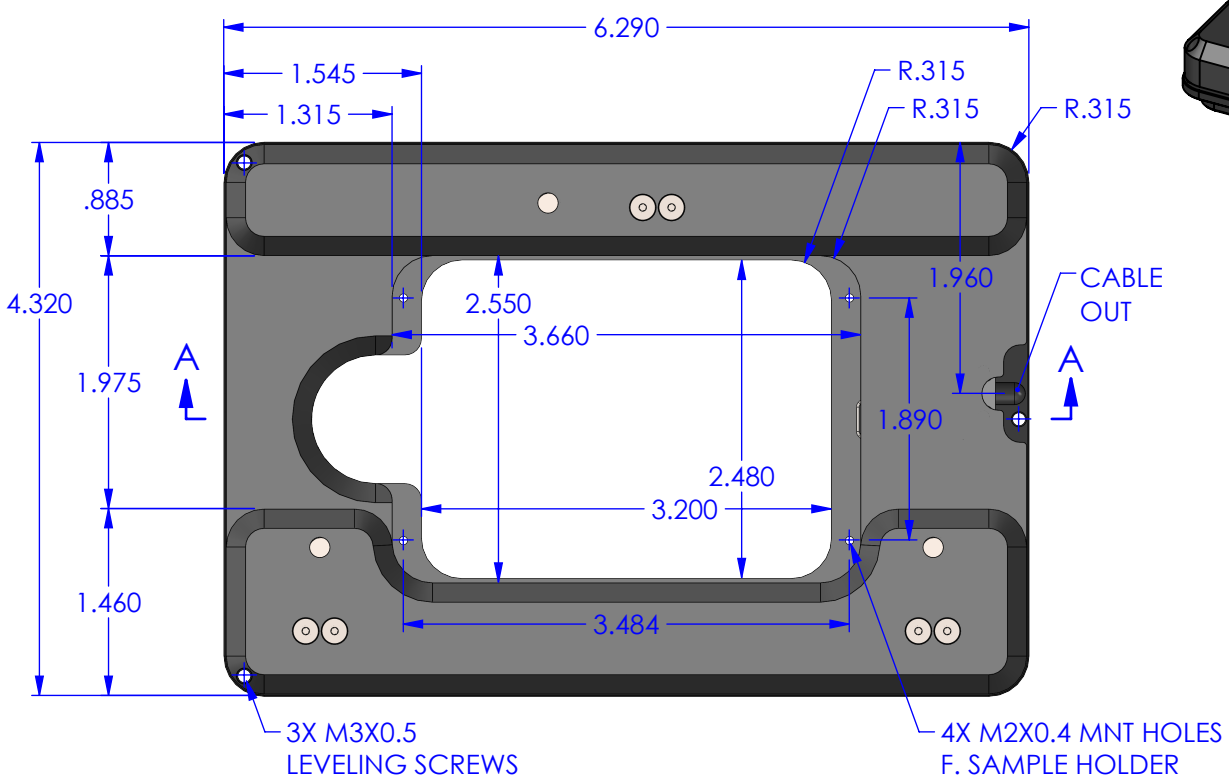

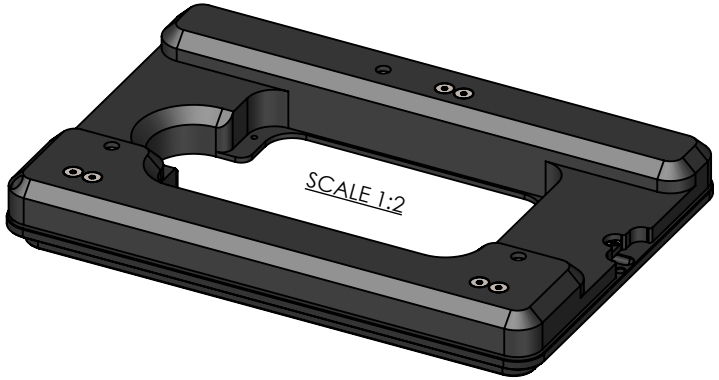

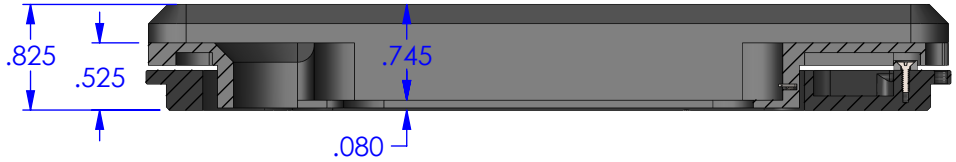

SECTION A-A

TRAVEL OPTIONS

IPZ-3150: 150µm
IPZ-3300: 300µm
IPZ-3500: 500µm

SAMPLE HOLDER OPTIONS

ASI

- PI545.2C7-3078 - CHAMBER HOLDER
- IPZ-4001 - SINGLE SLIDE / 35mm PETRI
- IPZ-4002 - 2"x3" SLIDE / 50-60mm PETRI

PI

- P-545.SH3 - SLIDE HOLDER
- P-545.PD3 - 35mm PETRI HOLDER
- P-545.PP3 - PLATE

PROPRIETARY AND CONFIDENTIAL

THE INFORMATION CONTAINED IN THIS DRAWING IS THE SOLE PROPERTY OF APPLIED SCIENTIFIC INSTRUMENTATION. ANY REPRODUCTION IN PART OR AS A WHOLE WITHOUT THE WRITTEN PERMISSION OF APPLIED SCIENTIFIC INSTRUMENTATION IS PROHIBITED.

APPLIED SCIENTIFIC INSTRUMENTATION
29391 W ENID RD
EUGENE, OR 97402-9533
PHONE: (541)461-8181
FAX: (541)461-4018

UNLESS OTHERWISE SPECIFIED
.XX ± .01
.XXX ± .005
.XXXX ± .0002
FRACTIONS ± 1/32
ANGLES ± 1°

DESCRIPTION: INSERT - PIEZO Z

DRAWN BY/DATE	CHECKED BY/DATE	SCALE	REV	MATERIAL	DRAWING #
A. ARMSTRONG - 6/28/2017	V. MARSO - 8/8/2017	1:1.5	0	-	IPZ-3001 - PIEZO Z INSERT (CATALOG DRAWING).SLDDRW

4 3 2 1